A10VO63 Series Piston Variable Pump

Product show and brief introduction

Open circuit
Series 53
Size 63
Nominal pressure 25 MPa
Peak pressure 31.5 MPa

Features

—Variable axial piston pump in swash plate design for hydrostatic drives in open circuits
—Flow is proportional to drive speed and displacement. The flow is infinitely variable by adjustment of the swash plate.
—Strong bearings for long service life
—High permissible drive speeds
—High power to weight ratio
—Small dimensions
—Low noise level
—Good suction characteristics
—Axial and radial loading of drive shaft possible
—Pressure and flow control
—Electro-hydraulic pressure control
—Power control
—Electro-proportional displacement control
—Short response times

Model Code

A10V	O	63	LA5DS	/	5	3	R	–	V	S	C	62	N00

Axial piston unit

Swash plate design, variable Nom. pressure 25MPa, peak pressure 31.5MPa	HA10V

Operating mode

Pump, open circuit	O

Size

Displacement $V_{g\,max}$ in	mL/r	63

Control devices

Power control with pressure and flow control, X-T closed		
min. start of control	1.0 - 3.5 MPa	LA5DS
	3.6 - 7.0 MPa	LA6DS
	7.1 - 10.5 MPa	LA7DS
	10.6 - 14.0 MPa	LA8DS
	14.1 - 23.0 MPa	LA9DS

Series

	5

Index

LA···	3

Direction of rotation

Viewing on shaft end	right hand	R
	left hand	L

Seals

FKM (fluor-rubber)	V

Shaft end

Splined shaft to SAE J744, standard shaft	S
Similar to shaft "S" however for higher input torque	R
Splined shaft to SAE J744, reduced diameter, not for through drive	U
Similar to shaft "U" higher input torque, not for through drive	W

Mounting flange

SAE 2-hole	C

Port for service lines

SAE flange on side-opposite sides, UNC fixing thread	62

Through drive

Without through drive	N00

Technical data

Size				63
Displacement		$V_{g\,max}$	mL/r	63
Speed[1] max	at $V_{g\,max}$	$n_{o\,max}$	rpm	2600
	at $V_g < V_{g\,max}$	$n_{o\,max\,zul}$	rpm	3140
Flow	at $n_{o\,max}$	$q_{vo\,max}$	L/min	163
	at n_E = 1500rpm	$q_{vE\,max}$	L/min	95
Power (△P = 28 Mpa)	at $n_{o\,max}$	$P_{o\,max}$	kW	68
	at n_E = 1500rpm	$P_{E\,max}$	kW	39
Torque	at $V_{g\,max}$ (△P = 25 MPa)	T_{max}	Nm	250
	at $V_{g\,max}$ (△P = 10 MPa)	T	Nm	100
Fill volume		V	L	0.8
Weight approx. (without fluid)		m	kg	22

1) Values are valid with inlet pressure of 0.1MPa at suction inlet S.

Pressure, fl ow and power control

In order to achieve a constant drive torque with varying operating pressures, the swivel angle and with it the output flow of the pump, is varied in such a manner, that the product of flow and pressure remains constant.
Flow control is possible below the limit of the power curve.
When ordering please state the max. input torque in clear text.

Control data

Pilot fluid consumption max. approx. 3,0 L/min

Start of control (MPa)	TorqueT (Nm)	ordering code
1.0~3.5	15-43	LA5
3.6~7.0	43.1-83	LA6
7.1~10.5	83.1-119	LA7
10.6~14.0	119.1-157	LA8
14.1~23.0	157.1-265	LA9

Static characteristic and torque curves

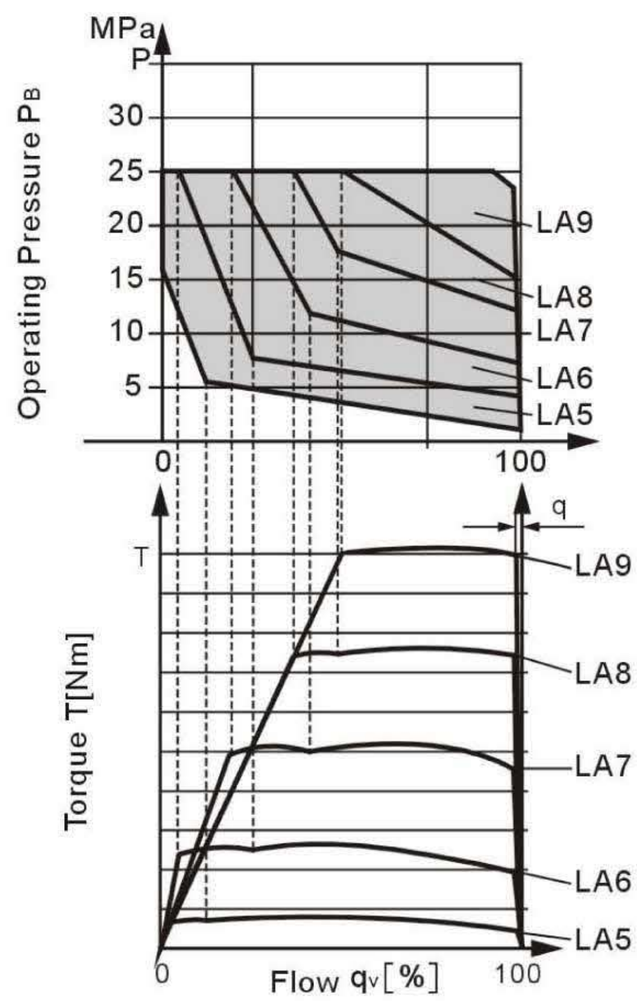

Schematic

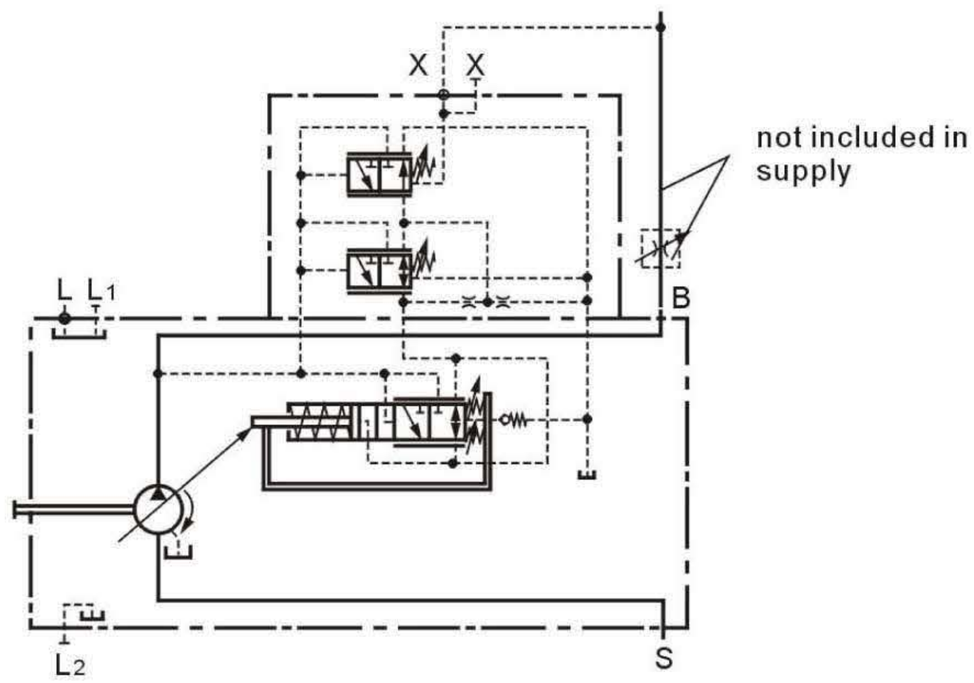

Ports

B	Outlet port
S	Inlet port
L, L_1, L_2	Case drain ports (L_1, L_2 plugged)
X	pilot pressure port

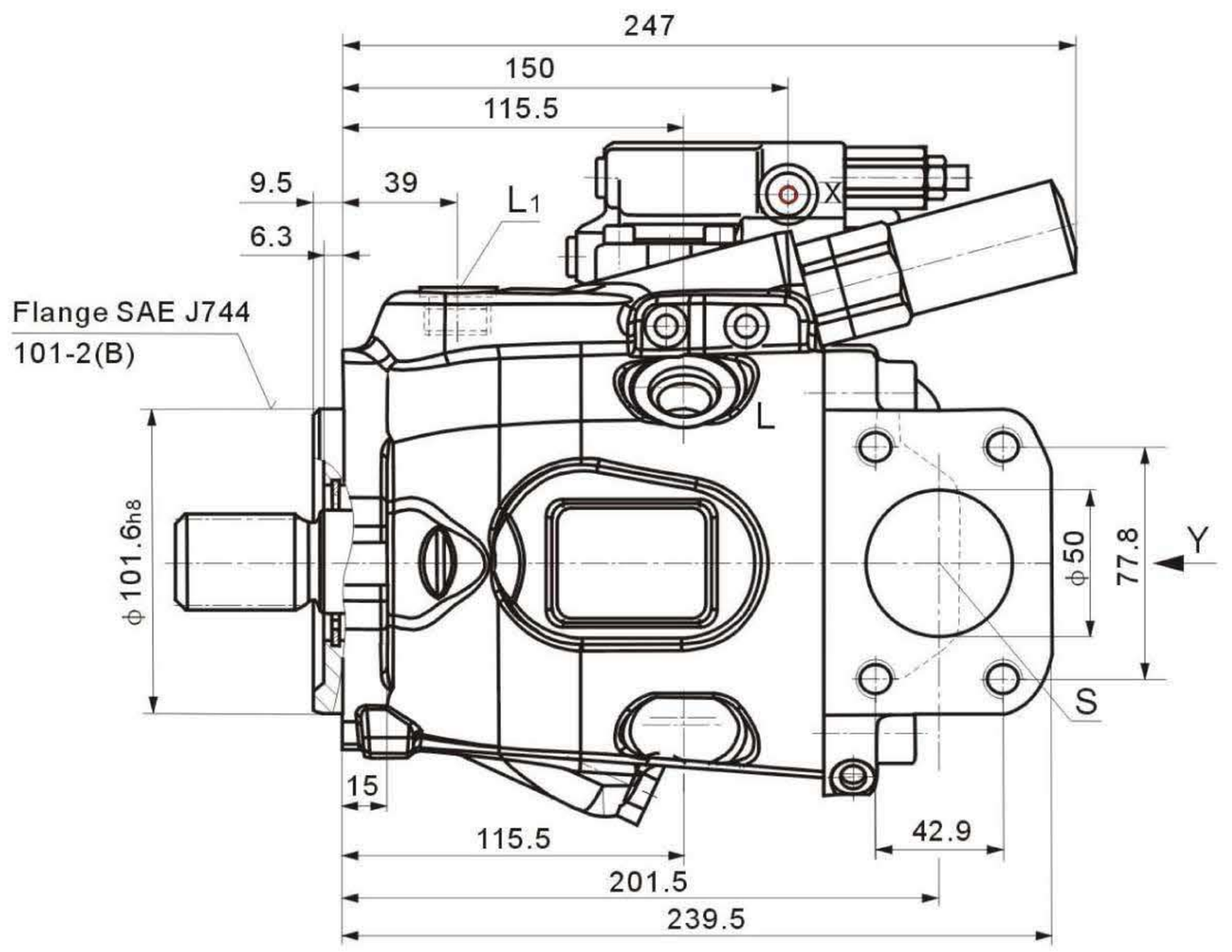

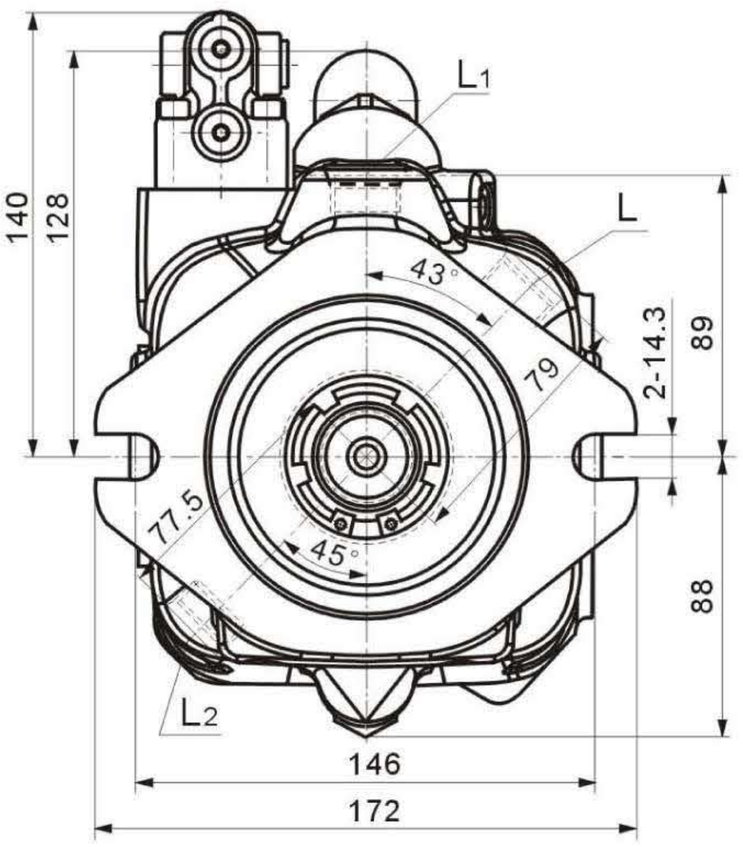

Shaft ends

S Spline shaft
1 1/4" 14T 12/24DP[1)]
SAE J744-32-4(C))

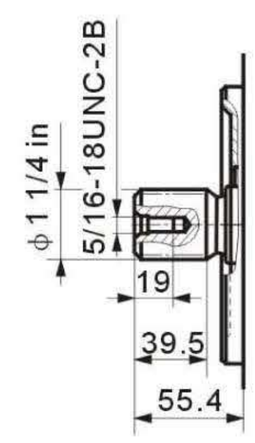

R Spline shaft
1 1/4" 14T 12/24DP[1)]
SAE J744-32-4(C))

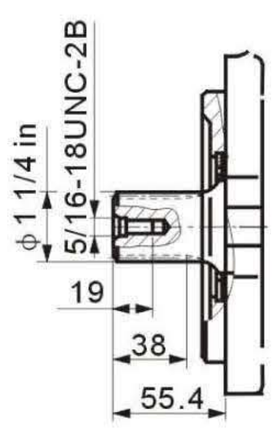

U Spline shaft
1" 15T 16/32DP[1)]
SAE J744-25-4(B-B)

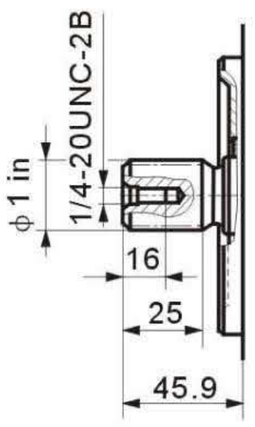

W Spline shaft
1" 15T 16/32DP[1)]
SAE J744-25-4(B-B)

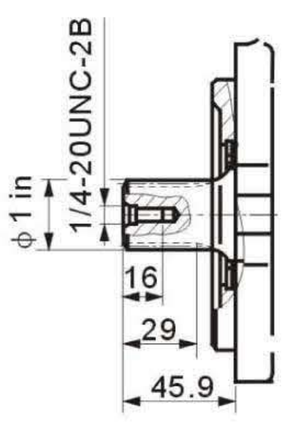

View Y
right hand rotation

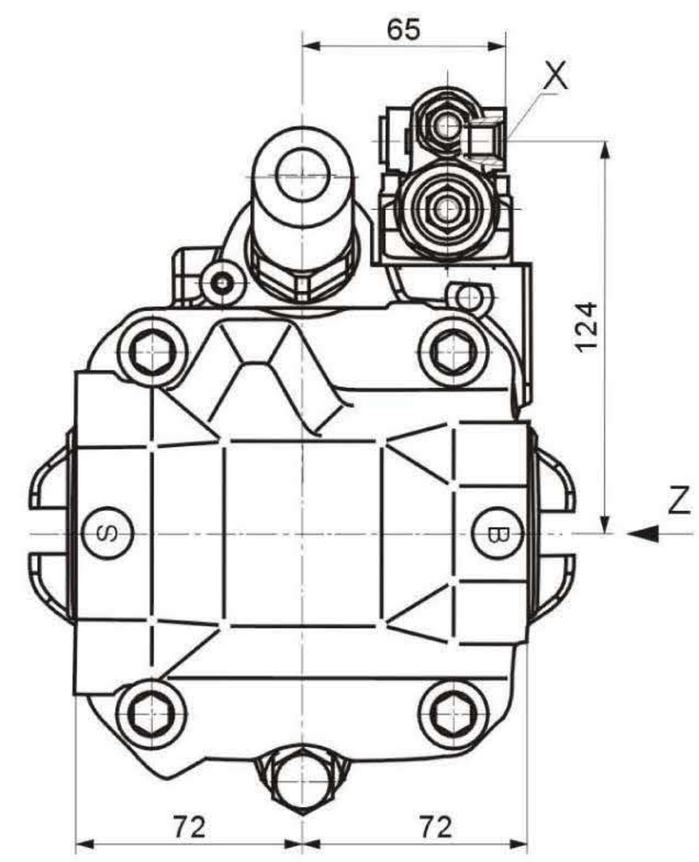

View Z

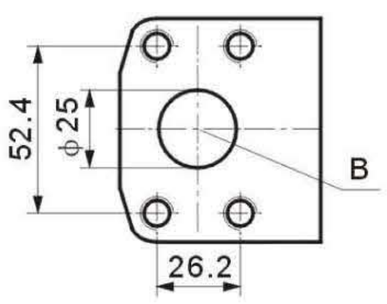

Location of service ports for left hand rotation; turn port plate 180°

Ports

B	Outlet port,SAE flange Fixing thread	SAE J518C ISO68	1 in 3/8-16UNC-2B;18 deep
S	Inlet port,SAE flange Fixing thread	SAE J518C ISO68	2 in 1/2-13UNC-2B;22 deep
L/L1	Case drain ports(L1 plugged)	ISO 11926	7/8-14UNC-2B
X	Pilot pressure port	ISO 11926	7/16-20UNC-2B;11.5 deep

1)ANSI B92.1a-1976,30° pressure angle,flat root,side fit, tolerance class 5.